BROMLEY YARD

INFORMATION PACK

B

BY-CO01

A VIBRANT CONTAINER VILLAGE FOR INDEPENDENT RETAILERS, MAKERS & CREATIVES

WELCOME

MEANWHILE CREATIVE

Bromley Yard is a new creative community coming to Manchester in 2026. Developed by Meanwhile Creative, the site will feature over 250 containers, studios, workshops, retail spaces, and lock up units across three phases, providing flexible workspace for artists, makers, musicians, and independent businesses.

LOCATION

Bromley St, Manchester M4 4JS

The site neighbours Victoria North and is a 10 minute walk from the city centre.

TRANSPORT
Tram stop: Victoria - 10 min walk
Train station: Piccadilly - 25 min walk

01. STUDIOS

A mix of 160 sqft (20ft) and 320 sqft (40ft) containers, alongside our new Lock Up Studios. These flexible workspaces are suitable for small start ups, makers, musicians, artists, desk based creatives, design agencies, hobbyists, retailers, and independent businesses looking for space to create, grow, and thrive.

02. COMMUNITY

At its heart, Meanwhile Creative is about community. 250 Independent businesses work side by side, sharing ideas, support and opportunity every day. With an onsite Community Manager and a culture built on collaboration, the yard brings together an eclectic mix of creatives and entrepreneurs in a welcoming, well connected environment.

HOW IT ALL WORKS

01. TERMS

Our standard license agreement is a flexible rolling contract with a two-month notice period, designed to help emerging businesses grow without the burden of long-term leases.

If your circumstances change, simply provide two full calendar months' notice to vacate.

02. DEPOSITS

Upfront, we require a deposit equivalent to one month's rent.

03. BUSINESS RATES

Tenants are responsible for paying their own business rates, though the vast majority of our tenants do not need to pay due to Small Business Rate Relief. It is essential that you proactively register with the council when moving into a new space to avoid being billed for Business Rates. A member of our team can advise on what you need to do.

04. UTILITIES

All utilities are included in the monthly rental fee. However, we do reserve the right to seek compensation if usage of things like electricity is deemed untypical.

05. INSURANCE

Meanwhile Creative has public liability insurance which covers the communal areas only. We strongly recommend that you get your own contents insurance to cover your workspace and materials.

06. INTERNET

We offer fast fibre internet with symmetrical download/upload speeds up to 100mbps. Prices start at £10 per month with a one-off activation fee of £30.

07. TEMPERATURE

Our converted shipping containers are pretty well insulated, but should you need to alter the temperature you are welcome to use your own heater or fan. Please note that fan heaters are not permitted.

08. SECURITY

Each container is fitted with a padlock on the exterior swing doors, with lockable sliding doors inside. The site is secured with key code entry and CCTV surveillance.

We also have an out of hours security company we use for any emergencies.

09. WASTE & CLEANING

Tenants can dispose of two bags of general waste and two bags of recycling per studio each week. Additional allowance may be available upon request. We clean and maintain communal areas but not private spaces.

10. CONTAINER DIMENSIONS

INTERNAL DIMS (MM)

	20FT	40FT
HEIGHT:	2250	2250
WIDTH:	2300	2300
LENGTH:	5700	12000

OUR MISSION

Meanwhile Creative was established with two goals in mind: to unlock dormant commercial space for positive use and curate flexible workspace for creatives, start-ups and small independent businesses.

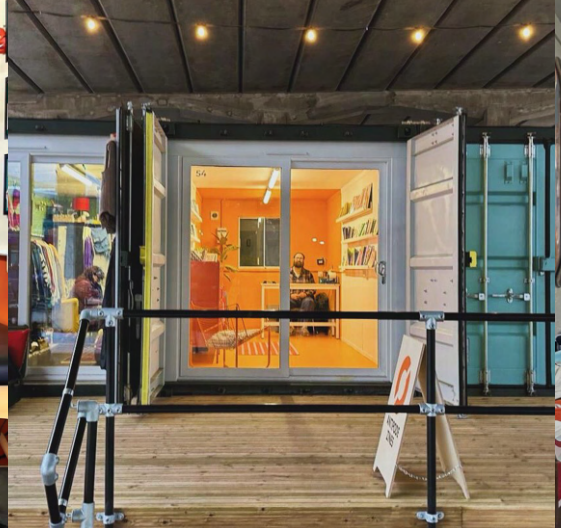

HELPFUL INFO

01. AS SEEN

All studios are taken ‘as seen,’ so assume your unit will be provided to you in the same condition as when you viewed it.

02. ALTERATIONS

We encourage you to make your space your own, but we ask that you complete a simple online form beforehand. Typical changes including painting walls, putting up shelves or replacing flooring. Sometimes there are conditions on an alteration such as 'making good' at the end of your tenancy.

03. PETS

Extremely well behaved dogs are allowed on site but must be kept on a lead when outside of your container.

04. NUISANCES

We operate a fairness policy whereby you as a prospective tenant should judge whether or not your activities are likely to cause a nuisance to others. This may include noise, smells, mess etc. If problems can't be solved it can result in your tenancy being terminated.

05. PARKING

Over 50 parking spaces are available for tenants on a first come, first served basis.

PRICES

01. £250 per month

160sqft (20ft)

Lock Up Studios (Green)

Unlined

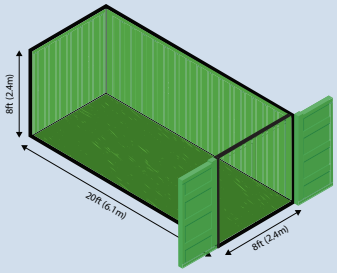

02. £375 per month

160sqft (20ft)

Container Studio (Blue)

Lined & Rear Window

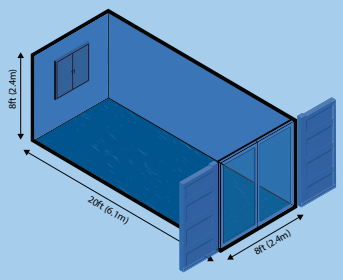

03. £475 per month

160sqft (20ft)

Containers (Yellow)

Lined, Access to Water & Rear Window

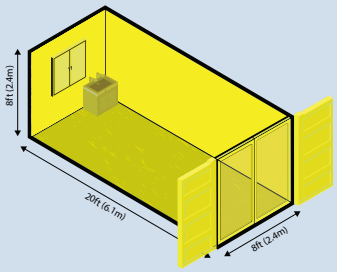

04. £800 per month

320sqft (40ft)

Containers Studio (Orange)

Lined, Access to Water & Rear Window

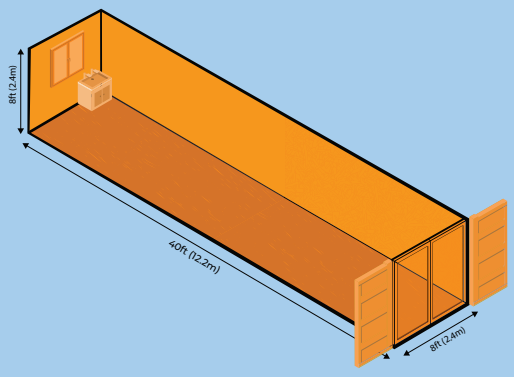

05. £1200 per month

320sqft (40ft)

Containers Studio (Purple)

Lined, Access to Water & Rear Window

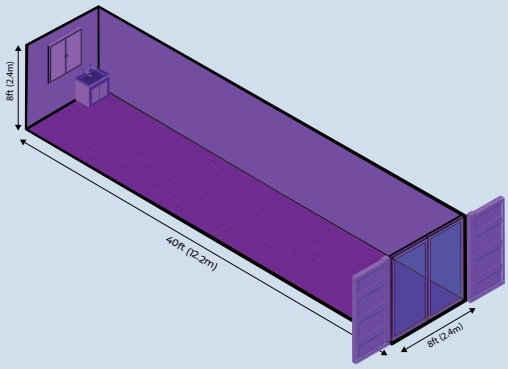

EACH STUDIO INCLUDES

1. All bills
   (bar internet & business rates)
2. Flexible rolling terms
3. Ample plug sockets
   and LED lights
4. Natural light &
   airflow through rear window
5. Heavy duty padlock
   for added security
6. The option for high speed
   fibre internet at an additional cost
7. Access to communal toilets and areas

THANK YOU

For more information or to be added to our mailing list and notified when spaces will be available, please email our team:

Contact Info

WEBSITE

www.meanwhilecreative.co.uk
www.bromleyyard.co.uk

EMAIL

by@meanwhilecreative.co.uk

SOCIAL

@bromley_yard